Product NO.	Renhotec-626-0237			
REV	DESCRIPTION	DWN	DATE	APPROVEN
A	First issue	Mr.Wang	2017/3/7	John kine

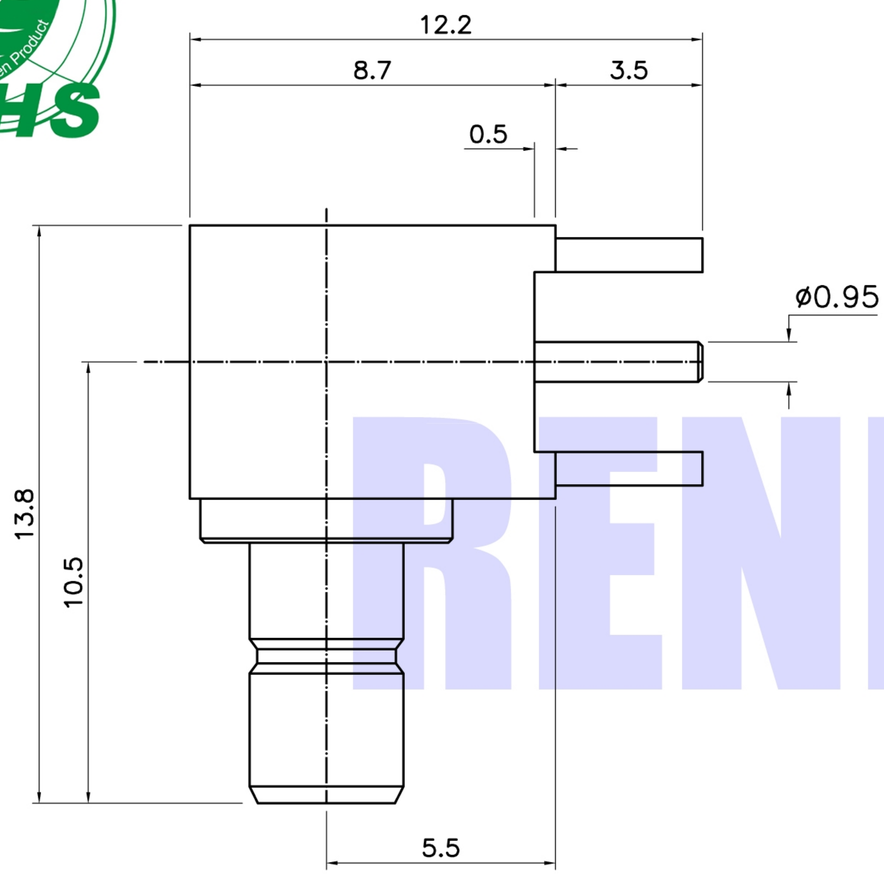

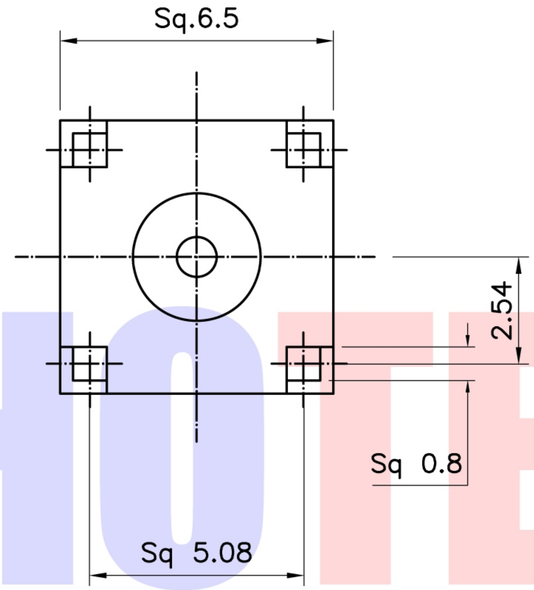

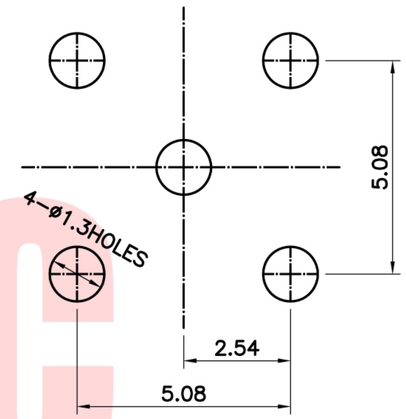

PCB MOUNT HOLES

Electrical Data
Impedance : 50Ω
Frequency range : DC~4 GHz
Insulation resistance:1000Mohms
Voltage rating : 500V RMS
V.S.W.R : ≤1.20
Temperature range : −65°C~+125°C

Item	Materials	Plating
Body	Brass	Gold Plated
Center contact	Brass	Gold Plated
Insulator	PTFE	–

NOTE:		Tolerance	0-6 ±0.10 6-30 ±0.20 30-120 ±0.30 Angular ±2°
DRAWN Zelin.Zhang	2017/3/7	View	
CHECKED		UNIT	MM
APPROVALS John Kine	2017/3/7	SCALE	1:1

RENHOTEC www.renhotec.com

RENHOTEC GROUP

Name: SMB R/A Jack PCB

SIZE	Product NO.	REV
A	RHT-626-0237	B

DateTime	CAD FILE	SHEET:
2017/3/7	D/company drawings/BD	1 OF 1

RENHOTEC