Product NO.	Renhotec-611-0043			
REV	DESCRIPTION	DWN	DATE	APPROVEN
A	First issue	Mr. chen	2016/3/20	John kine

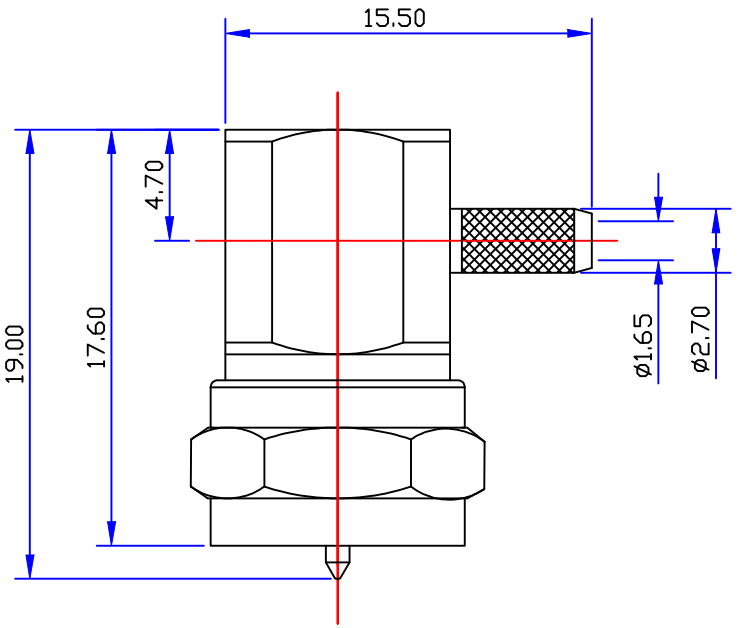

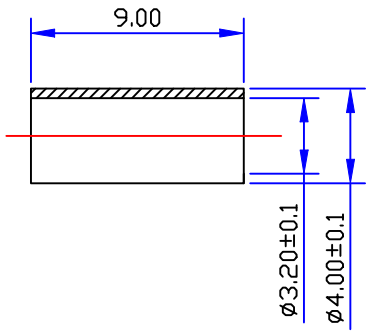

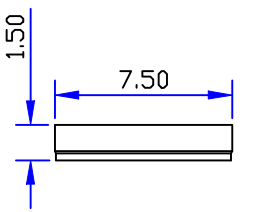

SPECIFICATIONS:

Impedance: 75 Ohms
Frequency Range:DC~3G
VSWR:30DdB Return loss @ 1GHZ
Working Voltage:15 watts continuous
Insulation Resistance:5000 Ohms min
Temperature Range:-40℃ TO +60℃
Drawings products are in line with ROHS standards

NO	Component Number	Material	Finish
1	Shell	Brass	NI:80-120u"
2	Body	Brass	NI:80-120u"
3	Insulator	Pom	White
4	Center contact	Brass	Au:3u"
5	Side cover	Brass	NI:80-120u"
6	Ferrule	Brass	NI:80-120u"
7			
8			
9			
10			

NOTE:

DRAWN	Zelin. Zhang	2016/03/20
CHECKED		
APPROVALS	John Kine	29.03.2016

Tolerance	0-6 ±0.10 6-30 ±0.20 30-120 ±0.30 Angular ±2°
View	
UNIT	MM
SCALE	1:1

RENHOTEC
www.renhotec.com

RENHOTEC GROUP

Name: F Plug 90° For RG/179

SIZE	Product NO.	REV
A	RENHOTEC-611-0043	B

DateTime	CAD FILE	SHEET: 1 OF 1
2016/3/20	D/company drawings/BD	