Product NO.	Renhotec-611-0026			
REV	DESCRIPTION	DWN	DATE	APPROVEN
A	First issue	Mr.chen	2016/3/17	John kine

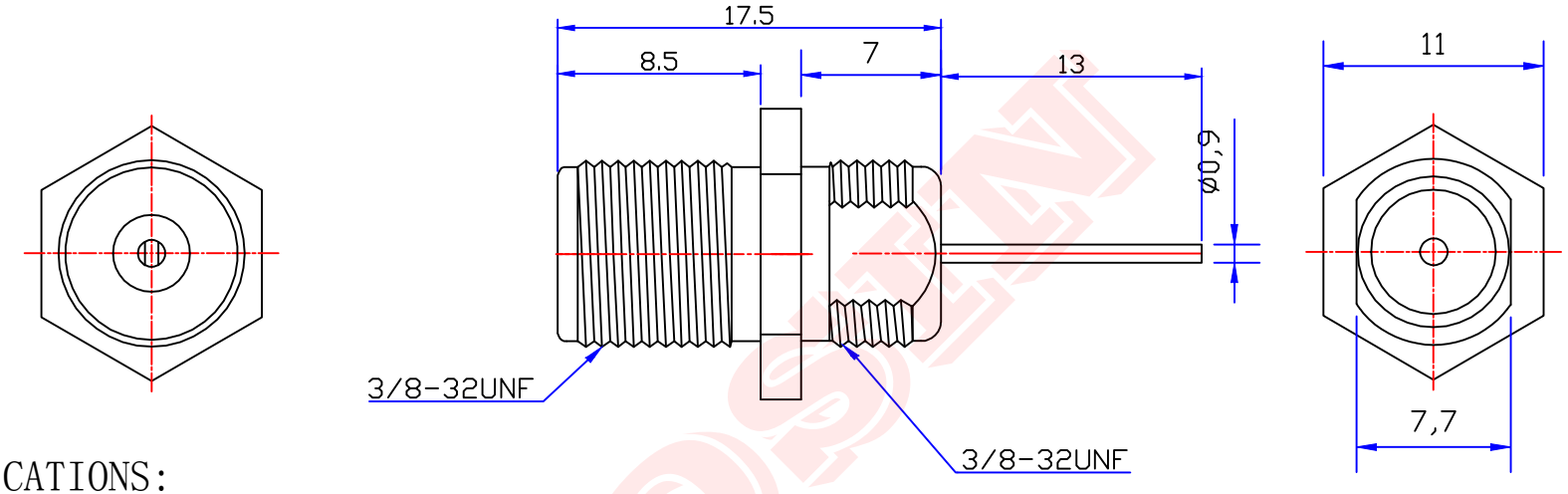

SPECIFICATIONS:

Impedance: 75 Ohms
Frequency Range:DC~3G
VSWR:30DdB Return loss @ 1GHZ
Working Voltage:15 watts continuous
Insulation Resistance:5000 Ohms min
Temperature Range:-40℃ TO +60℃
Drawings products are in line with ROHS standards

NO	Component Number	Material	Finish
1	Body	BRASS	NI:80-120u"
2	Contact pin	Brass	NI:80-120u"
3	Insulation	Pom	None
4			
5			
6			
7			
8			
9			
10			

NOTE:

DRAWN	Zelin.Zhang	2016/03/17
CHECKED		
APPROVALS	John Kine	17/03.2016

Tolerance	0-6 ±0.10 6-30 ±0.20 30-120 ±0.30 Angular ±2°
View	
UNIT	MM
SCALE	1:1

RENHOTEC www.renhotec.com RENHOTEC GROUP

Name: F Jack to F jack

SIZE	Product NO.	REV
A	RENHOTEC-611-0026	A

DateTime	CAD FILE	SHEET:
2016/3/17	D/company drawings/BD	1 OF 1