Product NO.	Renhotec-612-0276			
REV	DESCRIPTION	DWN	DATE	APPROVEN
A	First issue	Mr.Wang	2017/3/2	John kine

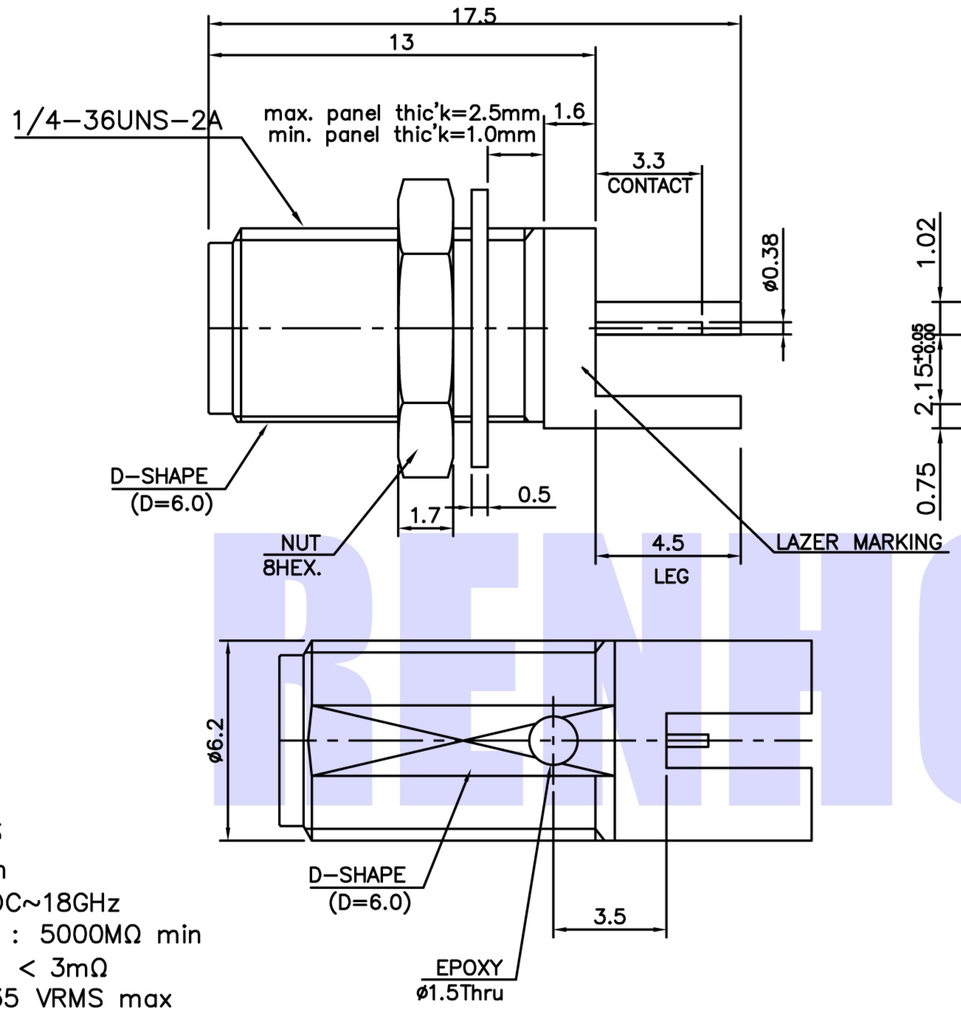

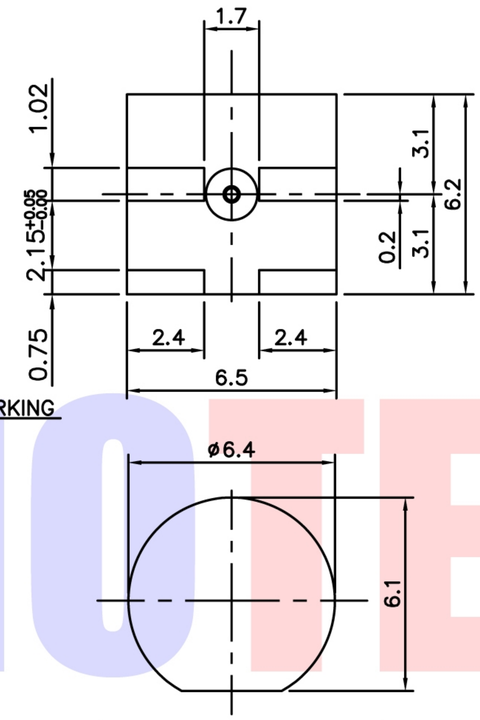

MOUNTING HOLES

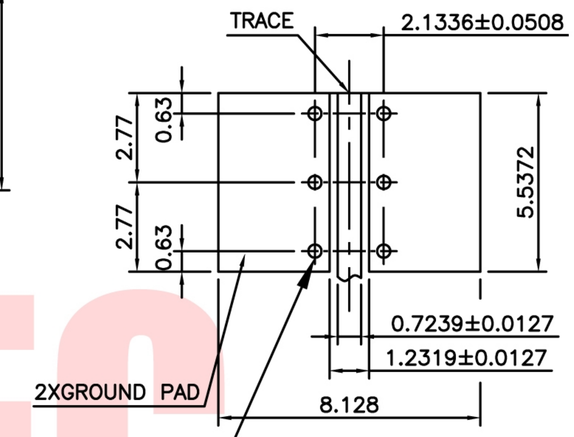

P.C.B LAYOUT

NOTES.

ELECTRICAL RATINGS
- Impedance : 50 ohm
- Frequency Range : DC~18GHz
- Insulation Resistance : 5000MΩ min
- Contact Resistance : < 3mΩ
- Working Voltage : 335 VRMS max
- Dielectric Withstanding Voltage : 1000V min

MECHANICAL DATA
- Coupling nut torque; 12Ncm-170Ncm
- Coupling nut retention force; >200N
- Life; 500 matings.
- Contact captivation; >27N

ENVIRONMENTAL DATA
- Operating and Storage Temperature range; -45°C~85°C/-65°C~125°C
- Vibration test; MIL-STD-202,Method204.Condition D.
- Mechanical Shock; MIL-STD-202,Method213,Condition
- Moisture resistance; MIL-STD-202,Method106.

**Center contact EPOXY captivated

*100% Specification guarantee mentioned on the drawing + COC

Connector parts	Materials	Finish
Body	Brass	Gold Plated 0.1micron over Electroless Nickel 2~4micron
Center contact	Beryllium copper	Gold Plated 0.1micron under
Insulator	TEFLON	-
Lock washer	Stainless steel	Gold Plated 0.1micron under
Nut	Brass	Gold Plated 0.1micron under

SMA End Launch Bulkhead Jack Receptacle
-Round Contact(2.00Board)

NOTE:		Tolerance	0-6 ±0.10 6-30 ±0.20 30-120 ±0.30 Angular ±2°
DRAWN Zelin.Zhang	2017/3/2	View	
CHECKED		UNIT	MM
APPROVALS John Kine	2017/3/2	SCALE	1:1

RENHOTEC www.renhotec.com

RENHOTEC GROUP

Name: Edge Mount SMA Jack

SIZE	Product NO.	REV
A	RHT-612-0276	B

DateTime	CAD FILE	SHEET: 1 OF 1
2017/3/2	D/company drawings/BD	